PLAIN BEARING COMPONENTS
"D" STYLE

Note: MDL "D" Style Plain Bearing Components are designed to be interchangeable with Plain Bearing Components from "Danly/IEM" of the same size and type.

"Danly/IEM" is a registered trademark of Connell Limited Partnership. MDL Mold & Die Components, Inc. is not connected, in any way, to Danly/IEM or Connell Limited Partnership.

Inch Index

Straight Guide Posts 04-05

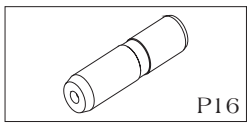

Demountable Guide Posts 06-07

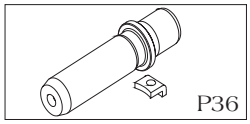

Demountable Steel Shoulder Bushings 08-09

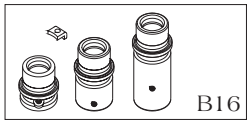

Demountable Bronze Plated Shoulder Bushings 08-09

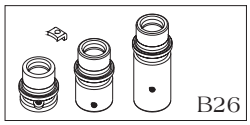

Demountable Low Profile Steel Bushings 10

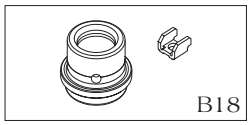

Demountable Low Profile Bronze Plated Bushings 10

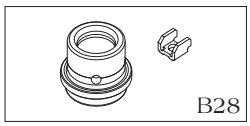

Bore Sizes Recommendations 11

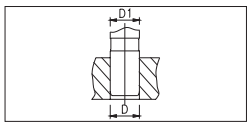

Clamps and Components Parts 12

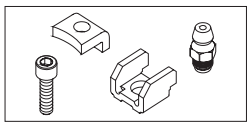

Assembly Options for MDL Guiding Components 12

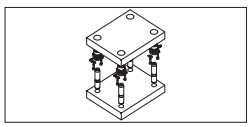

Demountable Steel Bosses 13

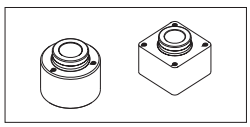

Demountable Round Steel Bosses 14

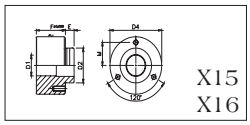

Demountable Square Steel Bosses 15

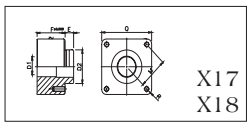

Metric Index

Straight Guide Posts 16-17

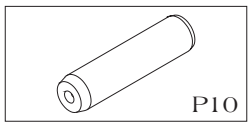

Demountable Guide Posts Locked by Clamp 18-19

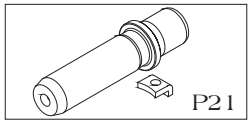

Demountable Guide Posts Locked by Retainer Plug 20-21

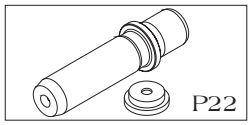

Demountable Steel Shoulder Bushings 22-23

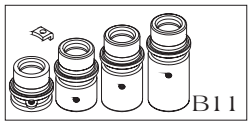

Demountable Bronze Plated Shoulder Bushings 22-23

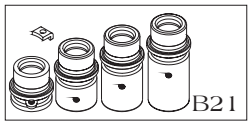

Demountable Low Profile Steel Bushings 24

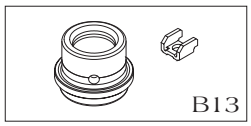

Demountable Low Profile Bronze Plated Bushings 24

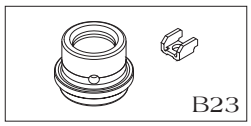

Bore Sizes Recommendations 25

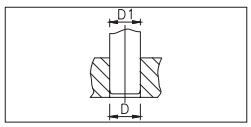

Clamps, Retainer Plugs and Component Parts 26

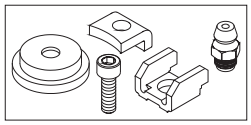

Assembly Options for MDL Guiding Components 27

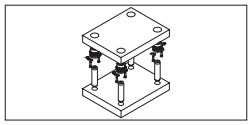

Demountable Steel Bosses 28

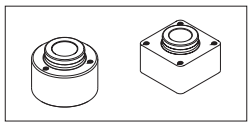

Assembly Options for MDL Steel Bosses 29

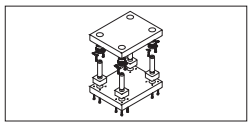

Demountable Round Steel Bosses 30

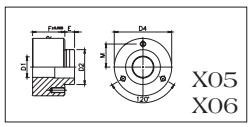

Demountable Square Steel Bosses 31

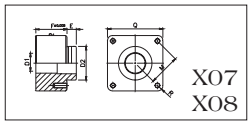

Straight Guide Posts

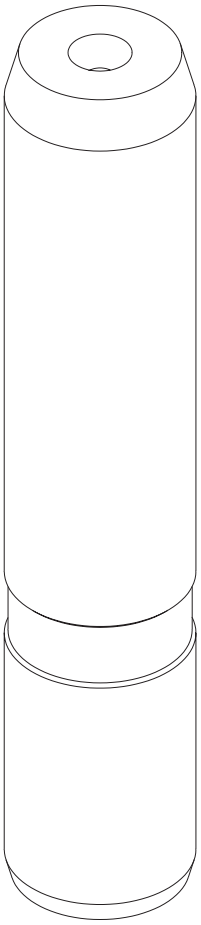

Case Hardened
60 - 64 HRc

To Be Use With

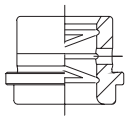

LOW PROFILE
BUSHINGS

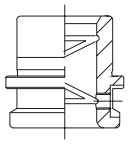

SHORT SHOULDER
BUSHINGS

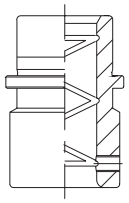

SHOULDER
BUSHINGS

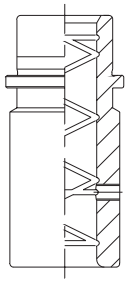

LONG SHOULDER
BUSHINGS

Examples

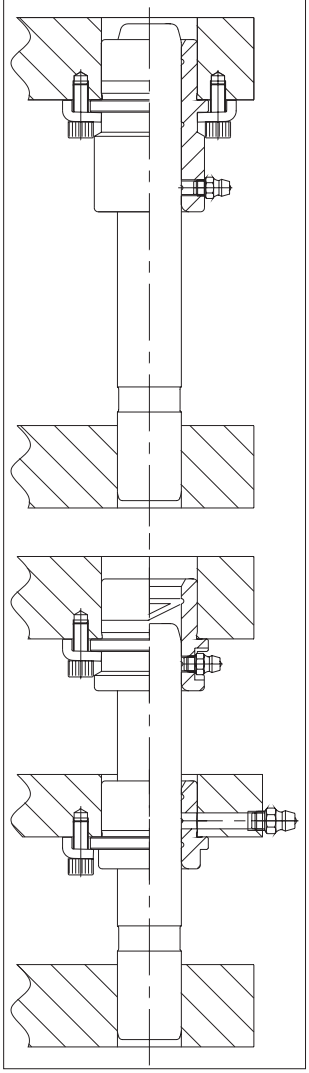

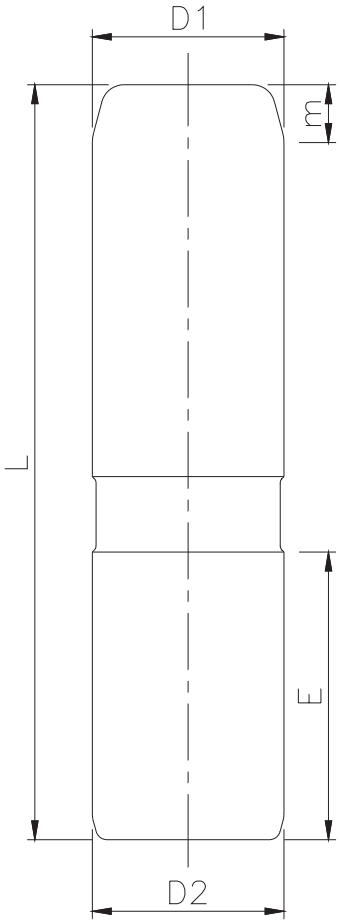

Assembly

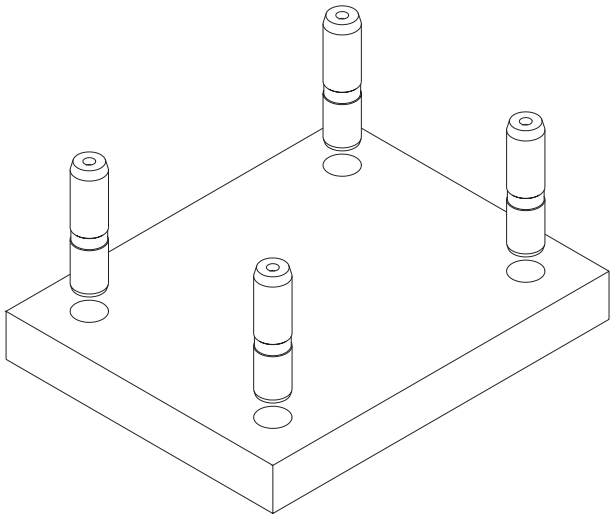

MDL Straight and Demountable Guide Posts feature bearing quality alloy steel, case hardened, precision ground with a surface finish better than Ra=20 μin that assures long working life of Die Sets components.

CAUTION:

MDL Guide Posts, Straight or Demountable, should not be cut at the working end to avoid exposure of core of Guide Post which is not hardened to 60 - 64 HRc.

D_1	3/4	1	1 1/4	1 1/2	1 3/4	2	2 1/2	3
L	CATALOG NUMBER							
3.5	P16.006.014							
4	P16.006.016	P16.008.016						
4.25	P16.006.017	P16.008.017						
4.5	P16.006.018	P16.008.018	P16.010.018	P16.012.018				
4.75	P16.006.019	P16.008.019	P16.010.019	P16.012.019				
5	P16.006.020	P16.008.020	P16.010.020	P16.012.020				
5.25		P16.008.021	P16.010.021	P16.012.021				
5.5	P16.006.022	P16.008.022	P16.010.022	P16.012.022				
5.75		P16.008.023	P16.010.023	P16.012.023				
6	P16.006.024	P16.008.024	P16.010.024	P16.012.024	P16.014.024	P16.016.024		
6.5		P16.008.026	P16.010.026	P16.012.026	P16.014.026	P16.016.026		
7		P16.008.028	P16.010.028	P16.012.028	P16.014.028	P16.016.028		
7.5		P16.008.030	P16.010.030	P16.012.030	P16.014.030	P16.016.030		
8		P16.008.032	P16.010.032	P16.012.032	P16.014.032	P16.016.032	P16.020.032	P16.024.032
8.5		P16.008.034	P16.010.034	P16.012.034	P16.014.034	P16.016.034	P16.020.034	P16.024.034
9		P16.008.036	P16.010.036	P16.012.036	P16.014.036	P16.016.036	P16.020.036	P16.024.036
10		P16.008.040	P16.010.040	P16.012.040	P16.014.040	P16.016.040	P16.020.040	P16.024.040
11		P16.008.044	P16.010.044	P16.012.044	P16.014.044	P16.016.044	P16.020.044	P16.024.044
12		P16.008.048	P16.010.048	P16.012.048	P16.014.048	P16.016.048	P16.020.048	P16.024.048
13					P16.014.052	P16.016.052	P16.020.052	P16.024.052
14					P16.014.056	P16.016.056	P16.020.056	P16.024.056
17						P16.016.068	P16.020.068	P16.024.068
20						P16.016.080	P16.020.080	P16.024.080
E	1.000	—	—	1.75	—	—	—	
E	1.125	1.50	1.75	2.00	2.25	2.50	3.50	
m	.1440	.2756	.4008					

Demountable Guide Posts

MDL

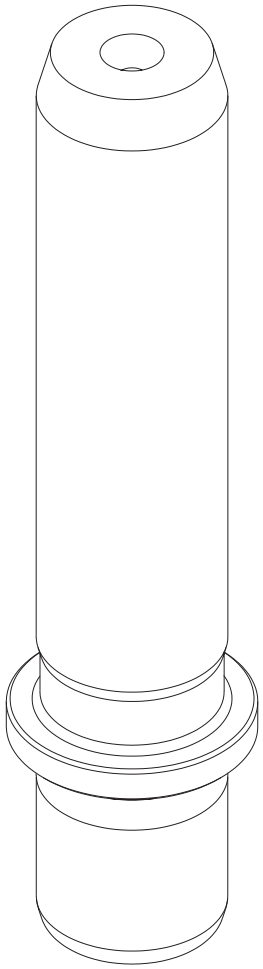

Case Hardened
60 - 64 HRc

To Be Use With

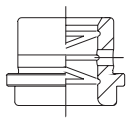

LOW PROFILE BUSHINGS

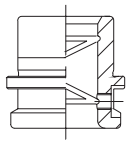

SHORT SHOULDER BUSHINGS

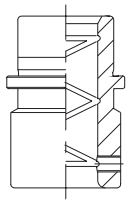

SHOULDER BUSHINGS

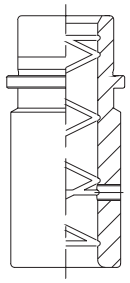

LONG SHOULDER BUSHINGS

Examples

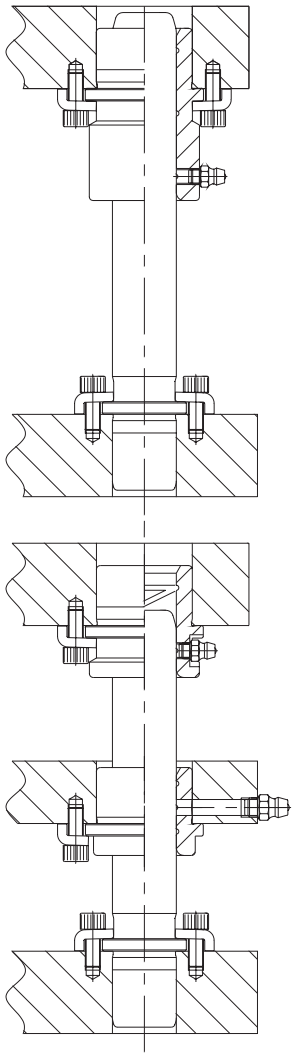

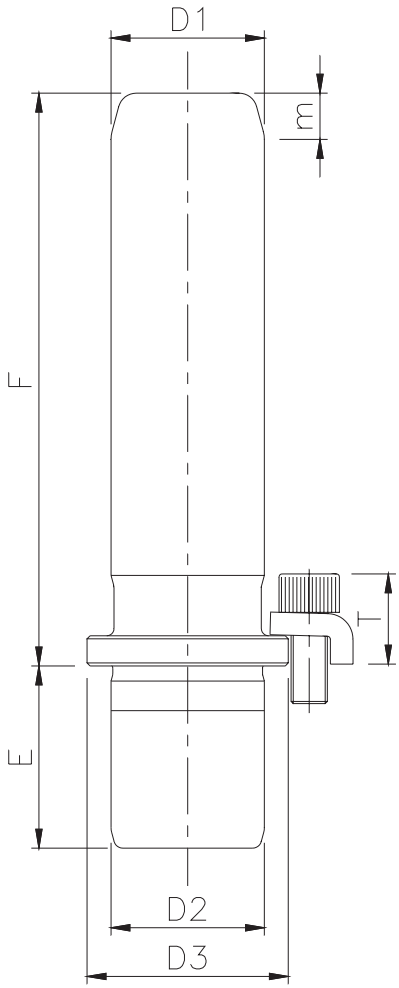

Component Parts Supplied

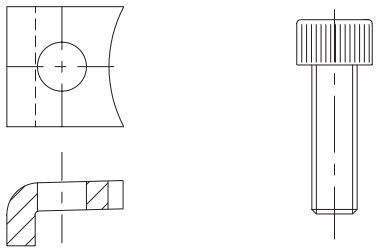

Clamp Arrangements

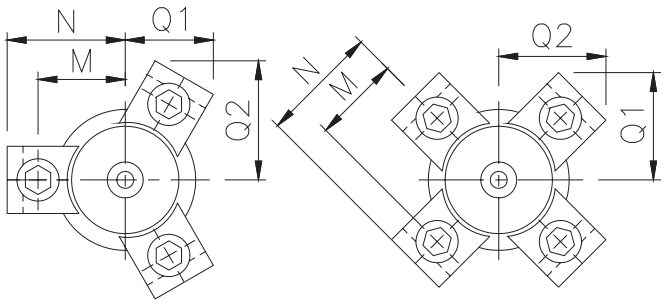

Assembly

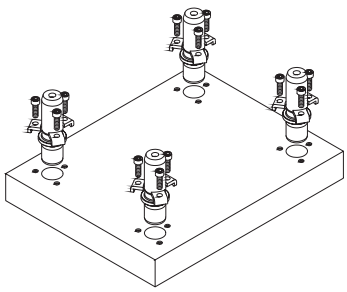

Shoulder face and fit end are ground in the same operation to guarantee the perpendicularity of Demountable Guide Posts.

CAUTION:
When using Demountable Guide Posts, dimension T should be checked to avoid interference with shoulder of bushing at minimum shut height with tool life depleted.

MDL	Demountable Guide Posts	P36.DDD.FFF

D_1	1	1 1/4	1 1/2	1 3/4	2	2 ½	3
F	CATALOG NUMBER						
2.50	P36.008.010						
2.75	P36.008.011	P36.010.011	P36.012.011				
3.00	P36.008.012	P36.010.012	P36.012.012				
3.25	P36.008.013	P36.010.013	P36.012.013				
3.50	P36.008.014	P36.010.014	P36.012.014	P36.014.014	P36.016.014		
3.75	P36.008.015	P36.010.015	P36.012.015				
4.00	P36.008.016	P36.010.016	P36.012.016	P36.014.016	P36.016.016		
4.25	P36.008.017	P36.010.017	P36.012.017				
4.50	P36.008.018			P36.014.018	P36.016.018	P36.020.018	P36.024.018
4.75		P36.010.019	P36.012.019				
5.00	P36.008.020			P36.014.020	P36.016.020	P36.020.020	P36.024.020
5.25		P36.010.021	P36.012.021				
5.50	P36.008.022			P36.014.022	P36.016.022	P36.020.022	P36.024.022
5.75		P36.010.023	P36.012.023				
6.00	P36.008.024			P36.014.024	P36.016.024		
6.25		P36.010.025	P36.012.025				
6.50	P36.008.026			P36.014.026	P36.016.026	P36.020.026	P36.024.026
6.75		P36.010.027	P36.012.027				
7.00	P36.008.028						
7.25		P36.010.029	P36.012.029				
7.50	P36.008.030			P36.014.030	P36.016.030	P36.020.030	P36.024.030
8.25		P36.010.033	P36.012.033				
8.50				P36.014.034	P36.016.034	P36.020.034	P36.024.034
9.25		P36.010.037	P36.012.037				
9.50				P36.014.038	P36.016.038	P36.020.038	P36.024.038
10.25		P36.010.041	P36.012.041				
10.50				P36.014.042	P36.016.042	P36.020.042	P36.024.042
11.50				P36.014.046	P36.016.046		
13.50						P36.020.054	P36.024.054
14.50					P36.016.058		
16.50						P36.020.066	P36.024.066
17.50					P36.016.070		
D_3	1 5/16	1 9/16	1 7/8	2 1/4	2 1/2	3 1/32	3 1/2
E	1.1875		1.4375	1.6875	1.9375		2.4375
m	0.2756						
M	13/16	63/64	1 1/8	1 19/64	1 27/64	1 43/64	1 59/64
N	1.1436	1.4247	1.5622	1.7309	1.8540	2.1009	2.3484
Q_1	0.8210	0.9660	1.0363	1.4251	1.5135	1.6903	1.8671
Q_2	1.1090	1.3602	1.4820				
T	0.606	0.708					
CLAMPS	B01.006.000	B01.008.000					
SCREWS	A25.008.006 (1/4 - 20 x 3/4)	A25.010.006 (5/16 - 18 X 3/4)					
QTY.	3			4			

Demountable Shoulder Bushings

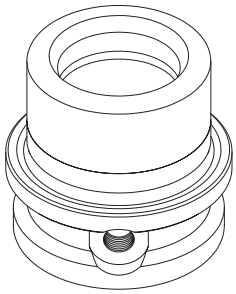

SHORT SHOULDER BUSHINGS

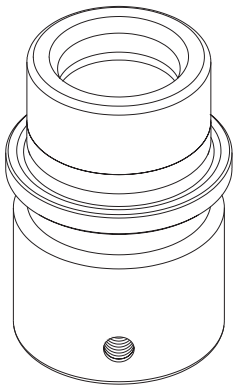

SHOULDER BUSHINGS

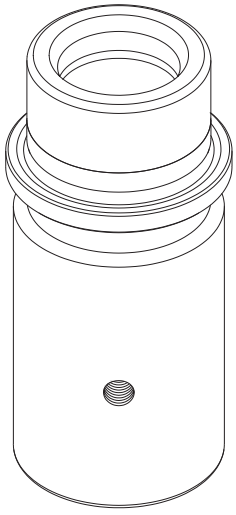

LONG SHOULDER BUSHINGS

Case Hardened
60-64 HRc

To Be Use With

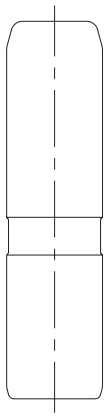

STRAIGHT GUIDE POSTS

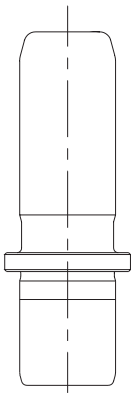

DEMOUNTABLE GUIDE POSTS

Examples

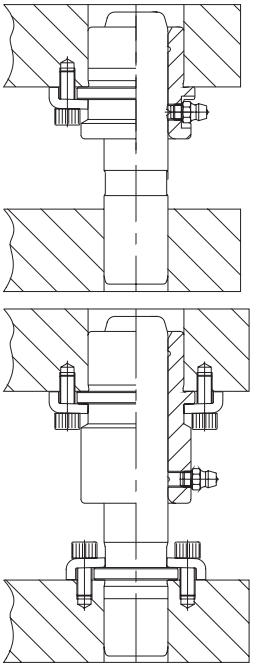

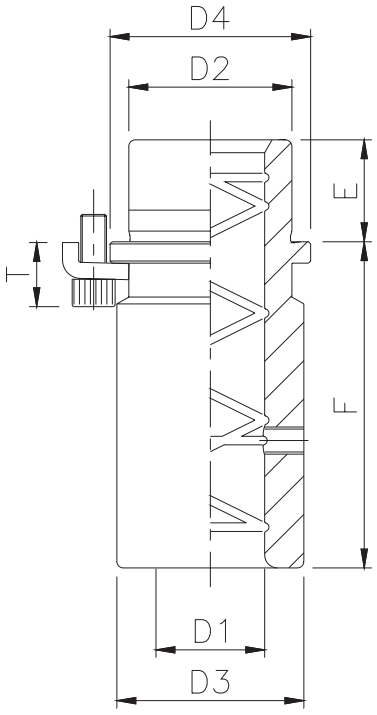

Clamp Arrangements

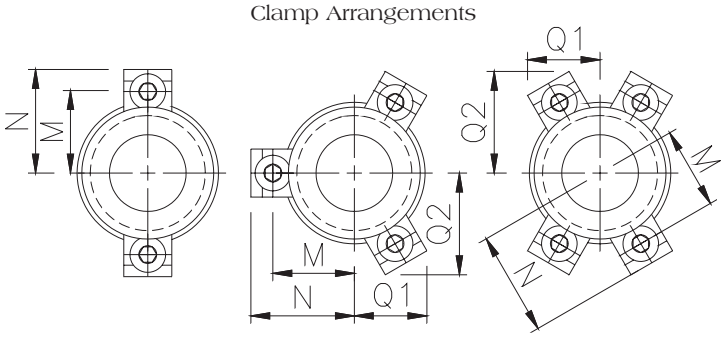

Component Parts Supplied

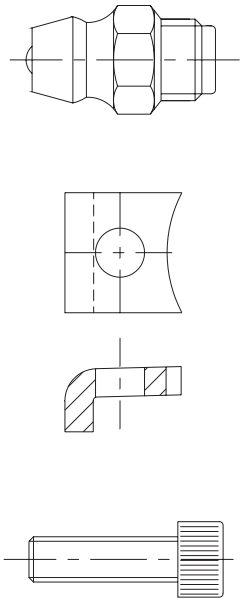

MDL Demountable Steel Bushings feature bearing quality alloy steel, case hardened. ID is precision ground and hone assuring interchangeability with Guide Posts.

Shoulder face and OD are ground in the same operation over an arbor to guarantee the concentricity and perpendicularity of the Bushings.

MDL Demountable Bronze Plated Bushings are manufactured using the same material and process as the steel bushings being electrolytic plated with Bronze before the honing operation.

The plating thickness is approximately .0006" which assures the low coefficient of friction of the bronze with the rigidity of the steel.

MDL	Demountable Shoulder Bushings	STEEL B16.DDD.FFF BRONZE PLATED B26.DDD.FFF

D_1	3/4	1	1 1/4	1 1/2	1 3/4	2	2 1/2	3
F	SHORT SHOULDER BUSHINGS							
0.7500 (3/4)	B16.006.012							
	—							
0.8125 (13/16)		B16.008.013	B16.010.013	B16.012.013				
		B26.008.013	B26.010.013	B26.012.013				
1.0000 (1)					B16.014.016	B16.016.016	B16.020.016	B16.024.016
					B26.014.016	B26.016.016	B26.020.016	B16.024.016
F	SHOULDER BUSHINGS							
1.5000 (1 1/2)			B16.010.024	B16.012.024	B16.014.024	B16.016.024		
			B26.010.024	B26.012.024	B26.014.024	B26.016.024		
1.7500 (1 3/4)	B16.006.028	B16.008.028						
	—	B26.008.028						
2.0000 (2)			B16.010.032	B16.012.032	B16.014.032	B16.016.032		
			B26.010.032	B26.012.032	B26.014.032	B26.016.032		
2.5000 (2 1/2)							B16.020.040	B16.024.040
							B26.020.040	B26.024.040
F	LONG SHOULDER BUSHINGS							
3.0000 (3)	—	B16.008.048	B16.010.048	B16.012.048	B16.014.048	B16.016.048	B16.020.048	B16.024.048
	—	B26.008.048	B26.010.048	B26.012.048	B26.014.048	B26.016.048	B26.020.048	B26.024.048
	DIMENSIONAL DATA							
D_2	1 1/8	1 1/2	1 3/4	2	2 1/4	2 1/2	3 1/4	3 3/4
D_3	1.175	1.720	1.940	2.190	2.503	2.909	3.659	4.190
D_4	1.300	1.845	2.095	2.345	2.658	3.064	3.814	4.283
E	.6875	.9375	1.1250	1.1875	1.3750	1.6250	1.8750	
M	25/32	1 1/16	1 7/32	1 3/8	1 1/2	1 45/64	2 5/64	2 5/16
N	1.0182	1.3857	1.6542	1.8078	1.9311	2.1317	2.5033	2.7360
Q_1	—	—	1.0832	1.1613	1.2238	1.3254	1.5929	1.6301
Q_2	—	—	1.5632	1.6985	1.8067	1.9826	2.3074	2.5104
T	.491	.606	.708					
CLAMPS	B01.006.001	B01.006.000	B01.008.000					
SCREWS	A25.008.005 (1/4-20x5/8)	A25.008.006 (1/4-20x3/4)	A25.010.006 (5/16-18X3/4)					
QTY	2	2	3		4			

Low Profile Bushings

STEEL
B18.DDD.FFF

BRONZE PLATED
B28.DDD.FFF

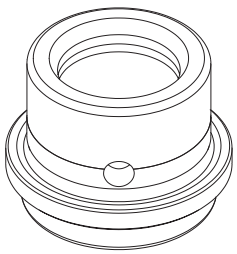

Case Hardened
60 - 64 HRc

To Be Use With:

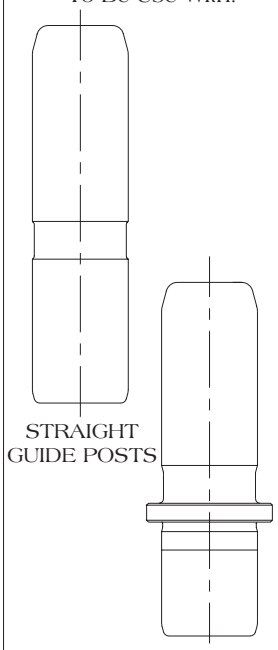

Examples

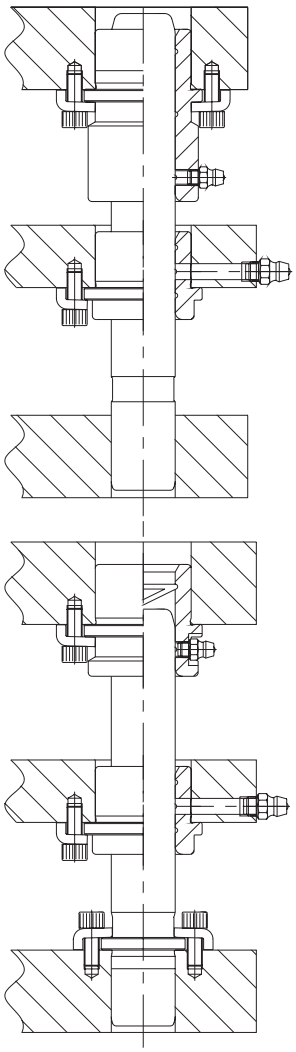

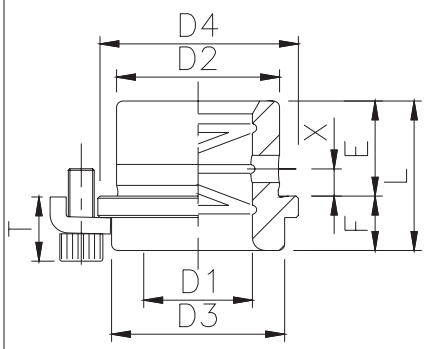

Component Parts Supplied

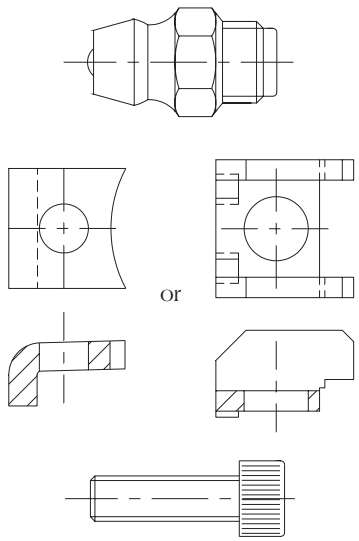

Clamp Arrangements

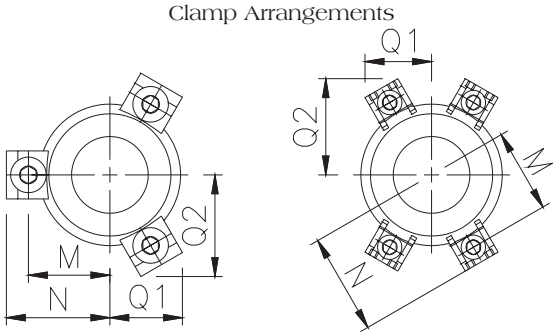

D_1	1	1 1/4	1 1/2	1 3/4	2	2 1/2
F	CATALOG NUMBER					
0.5 (1/2)	B18.008.008	B18.010.008	B18.012.008	B18.014.008	B18.016.008	B18.020.008
	B28.008.008	B28.010.008	B28.012.008	B28.014.008	B28.016.008	B28.020.008
E	0.875		1.875	2.375		2.625
L	1.375		2.375	2.875		3.125
D_2	1 1/2	1 3/4	2	2 1/4	2 1/2	3
D_3	1.593	1.843	2.062	2.312	2.625	3.062
D_4	1.845	2.095	2.345	2.658	3.064	3.814
M	1 1/16	1 3/16	1 29/64	1 39/64	1 25/32	2 9/64
N	1.3303	1.4533	1.8042	1.9576	2.1275	2.4818
Q_1	0.8698	0.9323	1.1953	1.2735	1.3598	1.5391
Q_2	1.2565	1.3648	1.7109	1.8463	1.9958	2.3063
T	0.562		0.461			
X	0.2500		0.6874	0.9374		1.0622
CLAMPS	B01.006.001		B02.008.001			
SCREWS	A25.008.005 (1/4 - 20 X 5/8)		A25.010.004 (5/16 - 18 X 1/2)			
QTY.	3			4		

Bore Sizes Recommendations

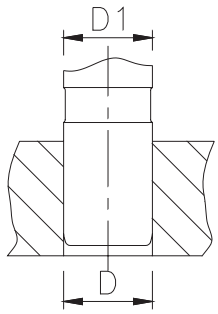

STRAIGHT GUIDE POSTS P16							
D_1	1	1 1/4	1 1/2	1 3/4	2	2 1/2	3
D	1.0008 / 1.0002	1.2508 / 1.2502	1.5008 / 1.5002	1.7508 / 1.7502	2.0008 / 2.0002	2.5008 / 2.5002	3.0008 / 3.0002

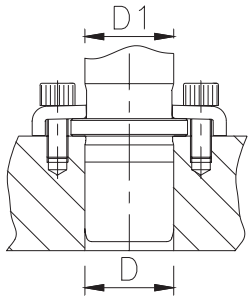

DEMOUNTABLE GUIDE POSTS P36							
D_1	1	1 1/4	1 1/2	1 3/4	2	2 1/2	3
D	1.0008 / 1.0002	1.2508 / 1.2502	1.5008 / 1.5002	1.7508 / 1.7502	2.0008 / 2.0002	2.5008 / 2.5002	3.0008 / 3.0002

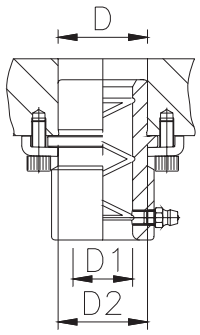

DEMOUNTABLE SHOULDER BUSHINGS B16 / B26							
D_1	1	1 1/4	1 1/2	1 3/4	2	2 1/2	3
D_2	1 1/2	1 3/4	2	2 1/4	2 1/2	3 1/4	3 3/4
D	1.5003 / 1.4997	1.7503 / 1.7497	2.0003 / 1.9997	2.2503 / 2.2497	2.5003 / 2.4997	3.2503 / 3.2497	3.7503 / 3.7497

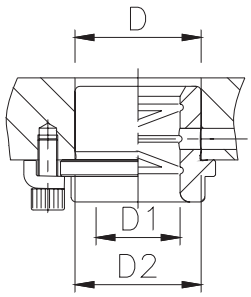

DEMOUNTABLE LOW PROFILE BUSHINGS B18 / B28						
D_1	1	1 1/4	1 1/2	1 3/4	2	2 1/2
D_2	1 1/2	1 3/4	2	2 1/4	2 1/2	3
D	1.5003 / 1.4997	1.7503 / 1.7497	2.0003 / 1.9997	2.2503 / 2.2497	2.5003 / 2.4997	3.0003 / 2.9997

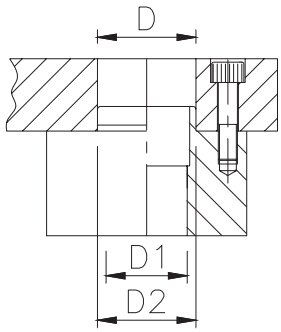

DEMOUNTABLE STEEL BOSSES X15 / X16 / X17 / X18						
D_1	1 1/4	1 1/2	1 3/4	2	2 1/2	3
D_2	2 1/4	2 1/2	2 3/4	3	3 3/4	4 1/4
D	2.0003 / 1.9997	2.2503 / 2.2497	2.5003 / 2.4997	3.2503 / 3.2497	3.7503 / 3.7497	4.2503 / 4.2497

CLAMPS

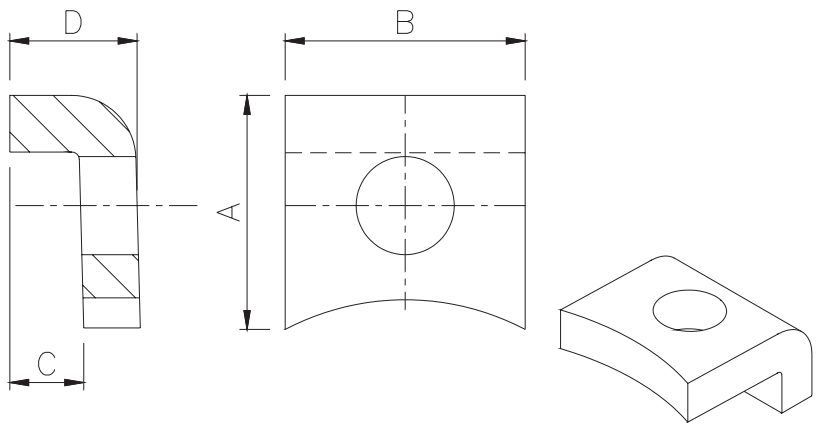

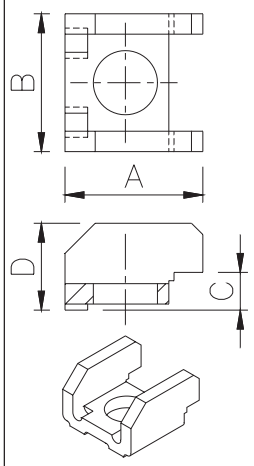

CAT. Nº	B01.006.000	B01.006.001	B01.008.000	B02.008.001
A	0.610	0.500	0.779	0.719
B	0.625	0.484	0.625	0.719
C	0.192	0.126	0.192	0.197
D	0.342	0.230	0.374	0.453
SCREWS	A25.008.006 (1/4 - 20 X 3/4)	A25.008.005 (1/4 - 20 X 5/8)	A25.010.006 (5/16 - 18 X 3/4)	A25.010.004 (5/16 - 18 X 1/2)

LUBRICATION FITTING

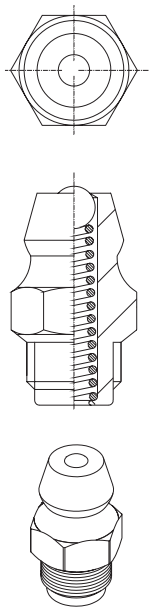

B07.008.028

ASSEMBLY OPTIONS FOR MDL GUIDING COMPONENTS

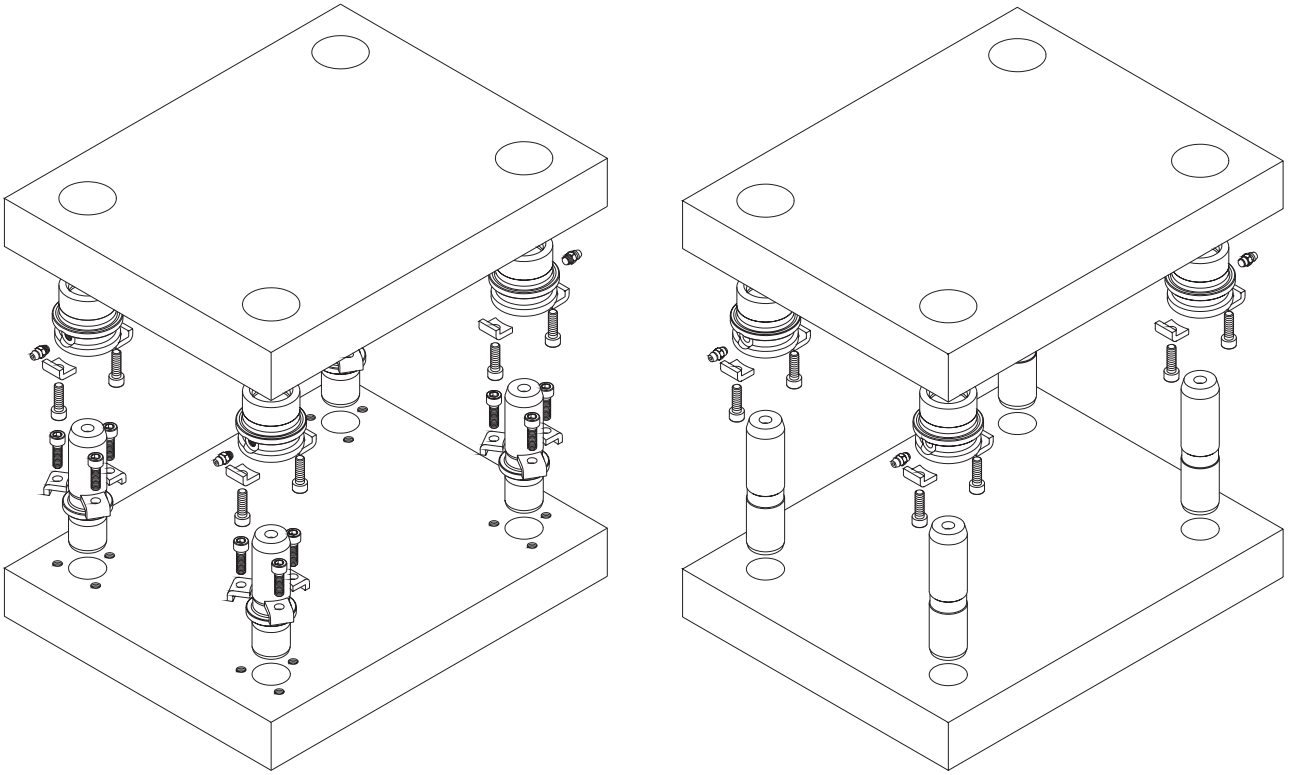

FEATURES OF MDL DEMOUNTABLE STEEL BOSSES

MDL Demountable Steel Bosses are manufactured with mild carbon steel to be use with Guide Posts and or Demountable bushings.

They are available in two shapes (Round and Square) and different heights to meet the requirements of Special Die Sets.

The unique design of those Bosses allows them to be interchangeable and do not require the use of Dowel Pins for their assembly. Those bosses may be disassembly for tool grinding.

If required, those bosses could be welded to the Die Set after assembly.

The locating diameter on the Bosses for Guide Posts and Demountable Bushings is the same. This allows the two plates of the Die Set to be machined together in a single setup.

ASSEMBLY OPTIONS

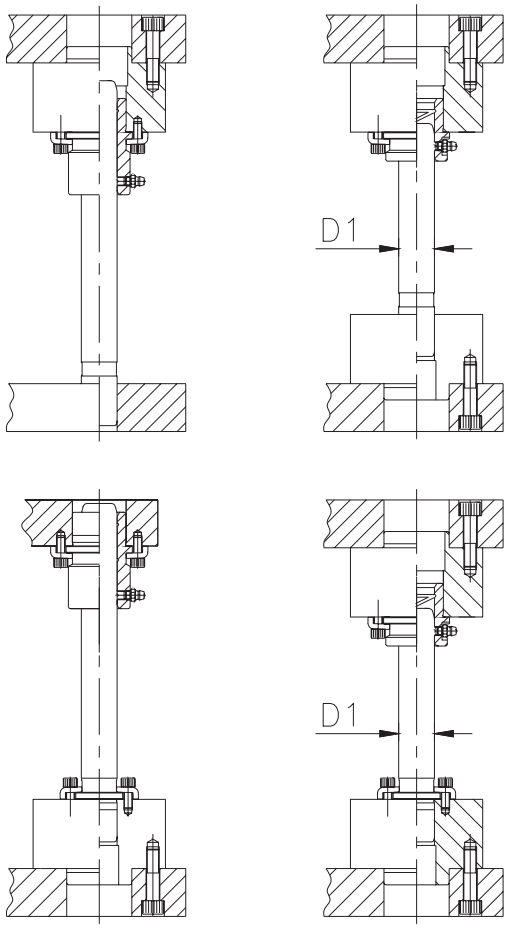

EXAMPLE

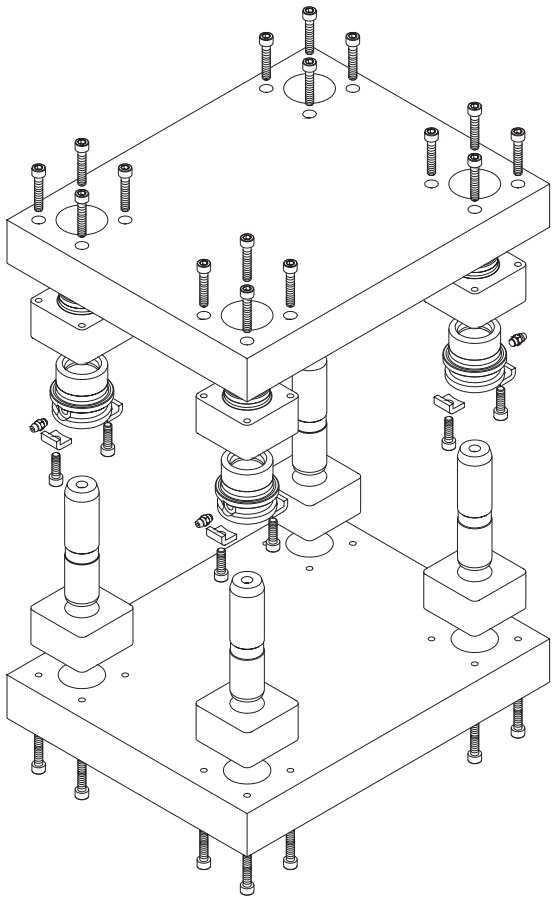

Demountable Round Steel Bosses

X15.DDD.FFF
X16.DDD.FFF

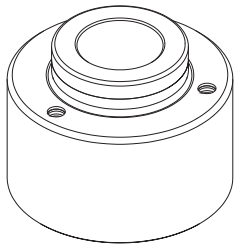

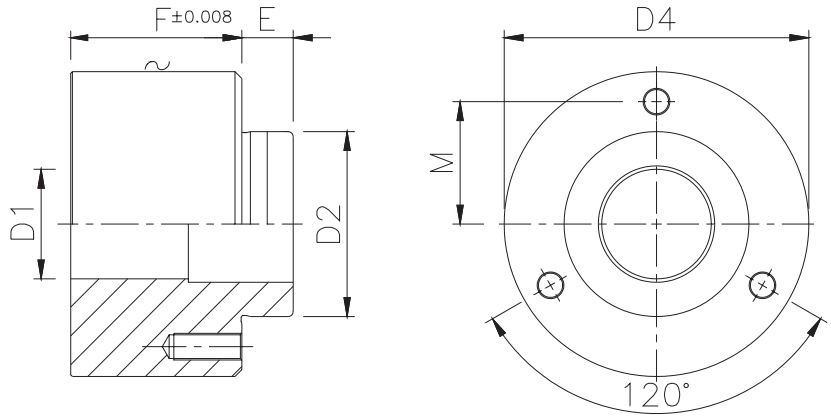

NB: Boss for Guide Post.

D_1	1 1/4	1 1/2	1 3/4	2	2 1/2	3
F	ROUND BOSSES FOR GUIDE POSTS					
1.5	X15.010.024					
2.0	X15.010.032					
2.5		X15.012.040				
3.0		X15.012.048	X15.014.048	X15.016.048		
4.0			X15.014.064	X15.016.064	X15.020.064	
5.0					X15.020.080	X15.024.080
F	ROUND BOSSES FOR BUSHINGS					
1.5	X16.010.024					
2.0	X16.010.032					
2.5		X16.012.040				
3.0		X16.012.048	X16.014.048	X16.016.048		
4.0			X16.014.064	X16.016.064	X16.020.064	
5.0					X16.020.080	X16.024.080
DIMENSIONAL DATA						
D_2	2 1/4	2 1/2	2 3/4	3	3 3/4	4 1/4
D_4	3 1/2	4	4 1/2		5 1/2	6 1/2
E	0.625					
M	1 3/8	1 9/16	1 3/4	1 15/16	2 5/16	2 11/16
THREAD	1/4 NC	5 /16 NC				3/8 NC

Demountable Square Steel Bosses

X17.DDD.FFF
X18.DDD.FFF

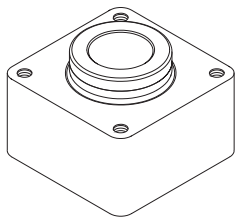

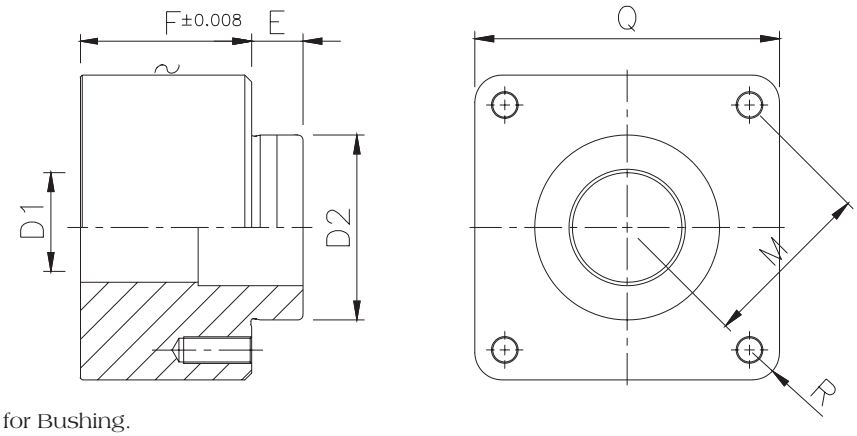

NB: Boss for Bushing.

D_1	1 1/4	1 1/2	1 3/4	2	2 1/2	3
F	SQUARE BOSSES FOR GUIDE POSTS					
1.5	X17.010.024					
2.0	X17.010.032					
2.5		X17.012.040				
3.0		X17.012.048	X17.014.048	X17.016.048		
4.0			X17.014.064	X17.016.064	X17.020.064	
5.0					X17.020.080	X17.024.080
F	SQUARE BOSSES FOR BUSHINGS					
1.5	X18.010.024					
2.0	X18.010.032					
2.5		X18.012.040				
3.0		X18.012.048	X18.014.048	X18.016.048		
4.0			X18.014.064	X18.016.064	X18.020.064	
5.0					X18.020.080	X18.024.080
DIMENSIONAL DATA						
D_2	2 1/4	2 1/2	2 3/4	3	3 3/4	4 1/4
Q	3 1/2	4	4 1/2		5 1/2	6 1/2
E	0.625					
M	1 3/4	2	2 1/4		2 3/4	3 1/4
THREAD	1/4 NC	5/16 NC				3/8 NC

Straight Guide Posts

MDL

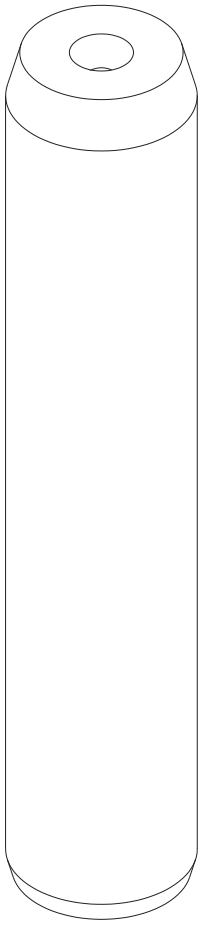

Case Hardened
60 - 64 HRc

To Be Use With

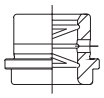

LOW PROFILE BUSHINGS

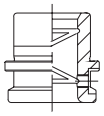

SHORT SHOULDER BUSHINGS

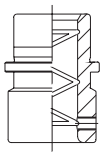

SHOULDER BUSHINGS

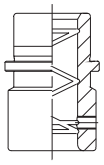

LONG SHOULDER BUSHINGS

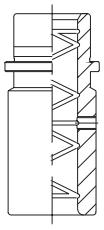

EXTRA LONG SHOULDER BUSHINGS

Examples

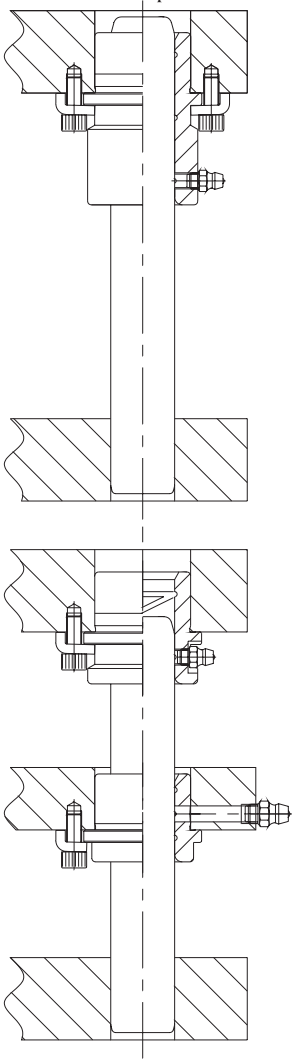

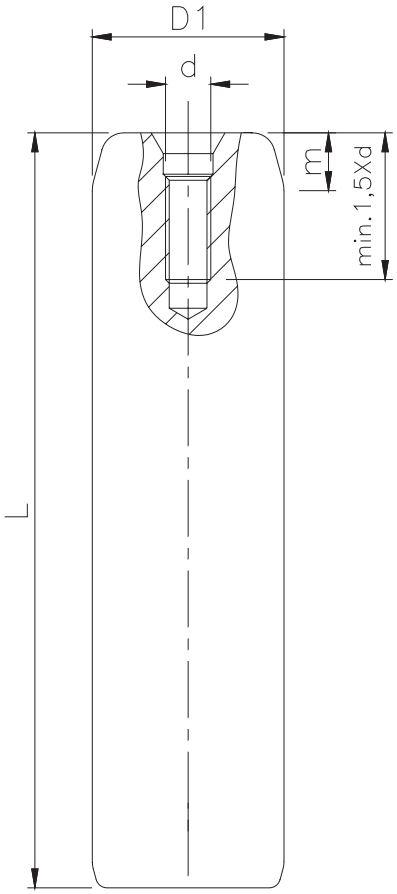

Assembly

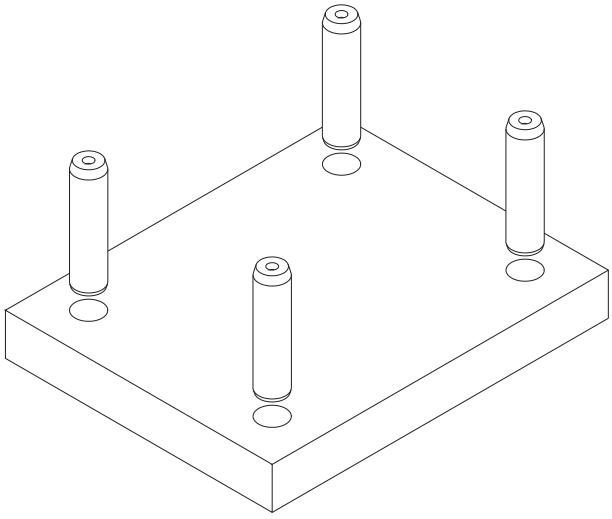

MDL Straigth and Demountable Guide Posts feature bearing quality alloy steel, case hardened, precision ground with a surface finish better than Ra = 0,5 μm that assures long working life of Die Sets components.

All MDL Straight Metric Guide Posts are drilled and tapped at the top end.

CAUTION:

MDL Guide Posts, Straight or Demountable, should not be cut at the drilled and tapped end to avoid exposure of core of Guide Posts which is not hardened to 60 - 64 HRc.

D_1	20	25	32	40	50	63	80
L	CATALOG NUMBER						
100	P10.020.100	P10.025.100					
110	P10.020.110	P10.025.110	P10.032.110				
125	P10.020.125	P10.025.125	P10.032.125	P10.040.125			
140	P10.020.140	P10.025.140	P10.032.140	P10.040.140			
160	P10.020.160	P10.025.160	P10.032.160	P10.040.160	P10.050.160		
180	P10.020.180	P10.025.180	P10.032.180	P10.040.180	P10.050.180		
200	P10.020.200	P10.025.200	P10.032.200	P10.040.200	P10.050.200	P10.063.200	P10.080.200
220		P10.025.220	P10.032.220	P10.040.220	P10.050.220	P10.063.220	P10.080.220
250		P10.025.250	P10.032.250	P10.040.250	P10.050.250	P10.063.250	P10.080.250
280		P10.025.280	P10.032.280	P10.040.280	P10.050.280	P10.063.280	P10.080.280
315			P10.032.315	P10.040.315	P10.050.315	P10.063.315	P10.080.315
355				P10.040.355	P10.050.355	P10.063.355	P10.080.355
400					P10.050.400	P10.063.400	P10.080.400
450					P10.050.450	P10.063.450	P10.080.450
500							P10.080.500
d	M5	M6	M8	M10	M12	M16	M20
m	7,3	9,6	10,1	10,6	11,3	12,1	13,3

Demountable Guide Posts Locked by Clamp

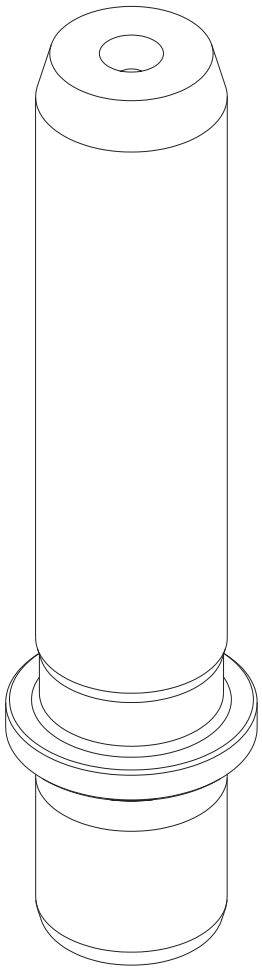

Case Hardened
60 - 64 HRc

To Be Use With

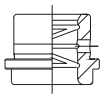

LOW PROFILE BUSHINGS

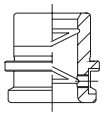

SHORT SHOULDER BUSHINGS

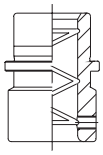

SHOULDER BUSHINGS

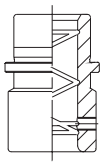

LONG SHOULDER BUSHINGS

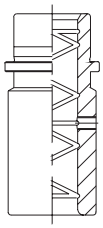

EXTRA LONG SHOULDER BUSHINGS

Examples

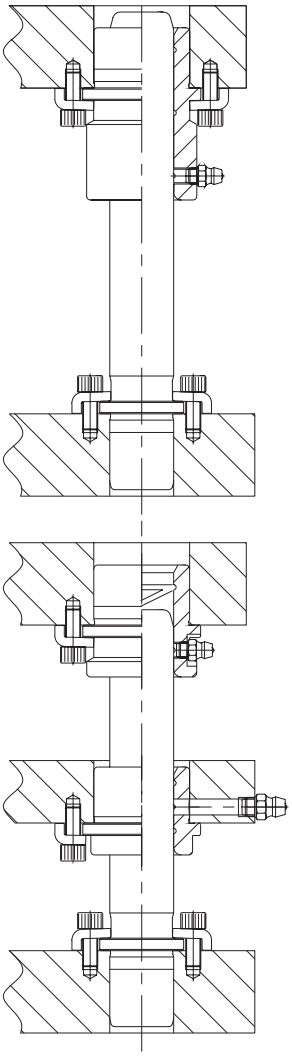

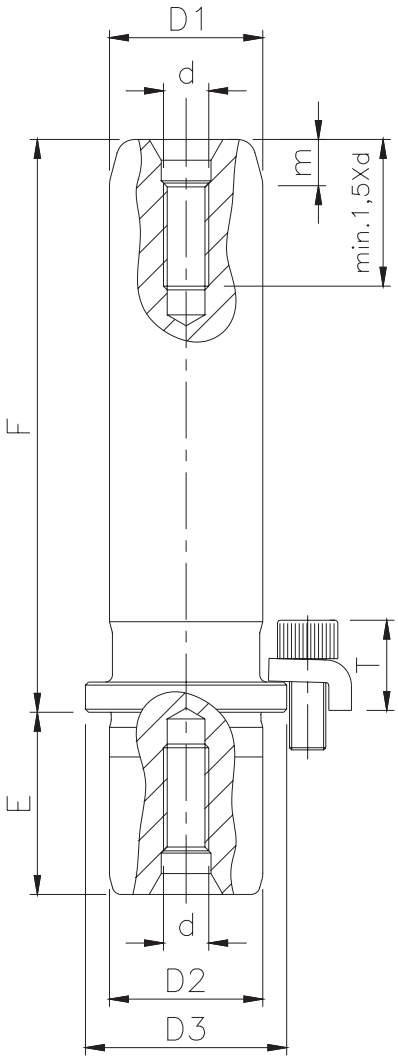

Component Part Supplied

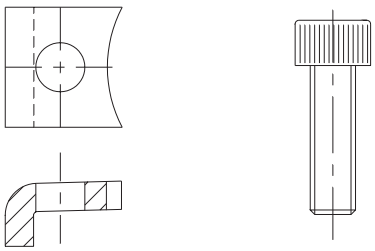

Clamp Arrangements

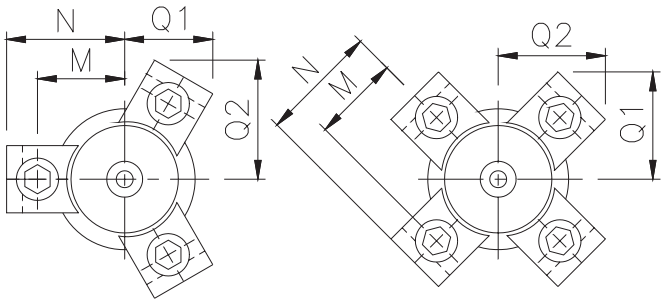

Assembly

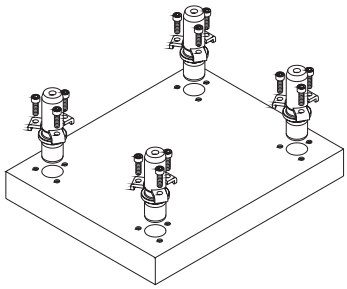

Shoulder face and fit end are ground in the same operation to guarantee the perpendicularity of Demountable Guide Posts.

CAUTION:
When using Demountable Guide Posts Locked by Clamp, dimension T should be checked to avoid interference with shoulder of bushing at minimum shut height with tool life depleted.

D_1	20	25	32	40	50	63	80
F	CATALOG NUMBER						
80	P21.020.080	P21.025.080					
90	P21.020.090	P21.025.090					
100	P21.020.100	P21.025.100	P21.032.100	P21.040.100			
110	P21.020.110	P21.025.110	P21.032.110	P21.040.110	P21.050.110		
125	P21.020.125	P21.025.125	P21.032.125	P21.040.125	P21.050.125	P21.063.125	P21.080.125
140	P21.020.140	P21.025.140	P21.032.140	P21.040.140	P21.050.140	P21.063.140	P21.080.140
160	P21.020.160	P21.025.160	P21.032.160	P21.040.160	P21.050.160	P21.063.160	P21.080.160
180		P21.025.180	P21.032.180	P21.040.180	P21.050.180	P21.063.180	P21.080.180
200		P21.025.200	P21.032.200	P21.040.200	P21.050.200	P21.063.200	P21.080.200
220			P21.032.220	P21.040.220	P21.050.220	P21.063.220	P21.080.220
250			P21.032.250	P21.040.250	P21.050.250	P21.063.250	P21.080.250
280			P21.032.280	P21.040.280	P21.050.280	P21.063.280	P21.080.280
315					P21.050.315	P21.063.315	P21.080.315
355					P21.050.355	P21.063.355	P21.080.355
400					P21.050.400	P21.063.400	P21.080.400
500							P21.080.500
D_3	25	32	40	50	63	76	93
E	20	25	32	40	45	50	60
d	M5	M6	M8	M10	M12	M16	M20
m	7,3	9,6	10,1	10,6	11,3	12,1	13,3
M	16,0	20,3	24,0	30,0	36,5	42,5	51,0
N	22,9	28,7	32,3	41,1	47,5	53,4	61,8
Q_1	16,5	20,7	22,5	27,0	38,7	43,0	49,0
Q_2	22,2	27,9	31,1	38,9			
T	11,3	15,1		18,1			
CLAMPS	B01.005.000	B01.006.000		B01.008.000			
SCREWS	A05.005.012 (M5 X 12)	A05.006.016 (M6 X 16)		A05.008.020 (M8 X 20)			
QTY.	3				4		

Demountable Guide Posts Locked by Retainer Plug

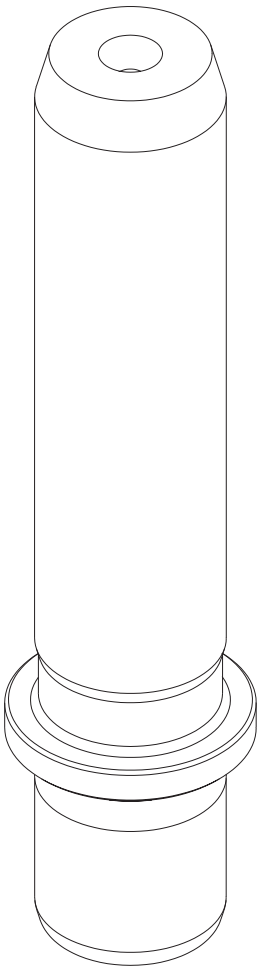

Case Hardened
60 - 64 HRc

To Be Use With

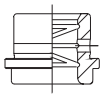

LOW PROFILE BUSHINGS

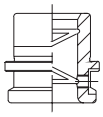

SHORT SHOULDER BUSHINGS

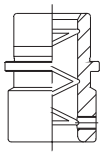

SHOULDER BUSHINGS

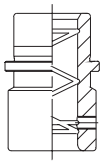

LONG SHOULDER BUSHINGS

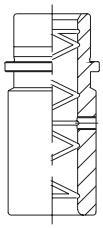

EXTRA LONG SHOULDER BUSHINGS

Examples

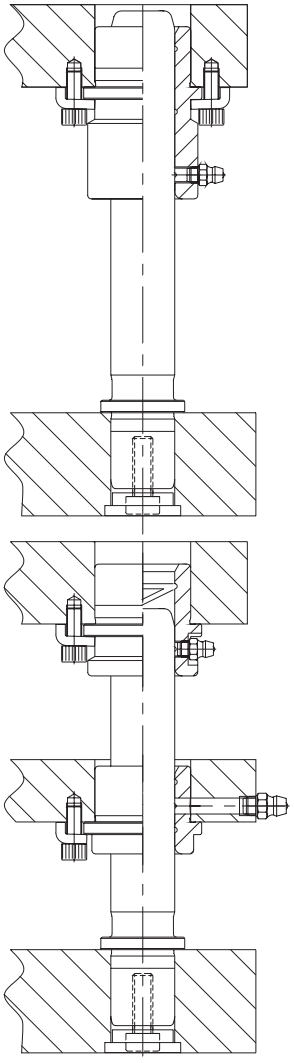

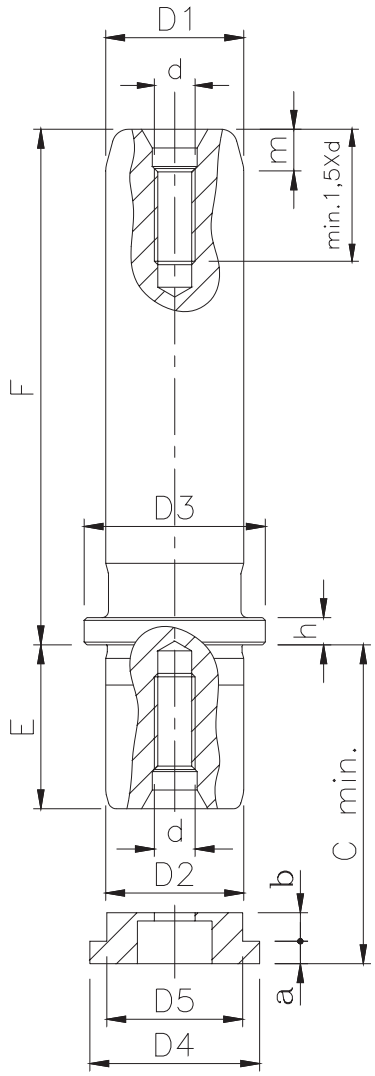

Componet Part Supplied

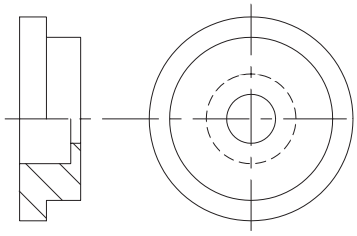

Shoulder face and fit end are ground in the same operation to guarantee the perpendicularity of Demountable Guide Posts.

Socket Head Cap Screw is not supplied since its length should be selected according to the thickness of Die Shoe.

Assembly

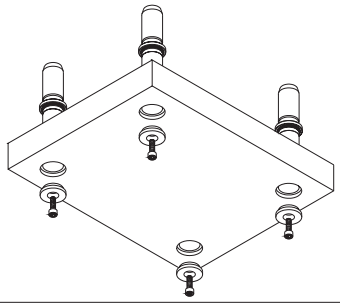

CAUTION:

When using Demountable Guide Posts Locked by Retainer Plug, dimension C min. should be checked. Die Shoe thickness should be greater than C min. to assure proper locking of Demountable Guide Posts.

Demountable Guide Posts Locked by Retainer Plug

D_1	20	25	32	40	50	63	80
F	CATALOG NUMBER						
80	P22.020.080	P22.025.080					
90	P22.020.090	P22.025.090					
100	P22.020.100	P22.025.100	P22.032.100	P22.040.100			
110	P22.020.110	P22.025.110	P22.032.110	P22.040.110	P22.050.110		
125	P22.020.125	P22.025.125	P22.032.125	P22.040.125	P22.050.125	P22.063.125	P22.080.125
140	P22.020.140	P22.025.140	P22.032.140	P22.040.140	P22.050.140	P22.063.140	P22.080.140
160	P22.020.160	P22.025.160	P22.032.160	P22.040.160	P22.050.160	P22.063.160	P22.080.160
180		P22.025.180	P22.032.180	P22.040.180	P22.050.180	P22.063.180	P22.080.180
200		P22.025.200	P22.032.200	P22.040.200	P22.050.200	P22.063.200	P22.080.200
220			P22.032.220	P22.040.220	P22.050.220	P22.063.220	P22.080.220
250			P22.032.250	P22.040.250	P22.050.250	P22.063.250	P22.080.250
280			P22.032.280	P22.040.280	P22.050.280	P22.063.280	P22.080.280
315					P22.050.315	P22.063.315	P22.080.315
355					P22.050.355	P22.063.355	P22.080.355
400					P22.050.400	P22.063.400	P22.080.400
500							P22.080.500
$D_3 = D_4$	25	32	40	50	63	76	93
D_4	25	32	40	50	63	76	93
D_5	19	24	30	38	48	63	80
E	20	25	32	40	45	50	60
d	M5	M6	M8	M10	M12	M16	M20
m	7,3	9,6	10,1	10,6	11,3	12,1	13,3
a	3,3	5,0					
b	4,2	4,0	7,0	10,0	13,0	19,0	25,0
C min.	28	35	45	56	64	75	91
h	3,3	5,0					
PLUG	P02.020.000	P02.025.000	P02.032.000	P02.040.000	P02.050.000	P02.063.000	P02.080.000

Demountable Shoulder Bushings

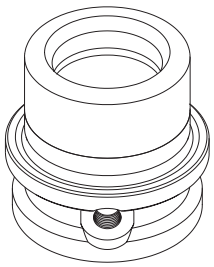

SHORT SHOULDER BUSHINGS

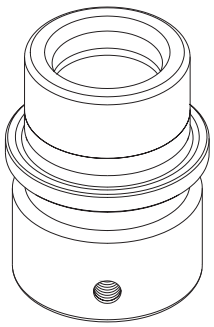

SHOULDER BUSHINGS

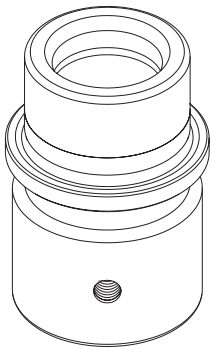

LONG SHOULDER BUSHINGS

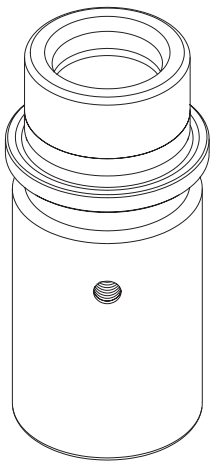

EXTRA LONG SHOULDER BUSHINGS

Case Hardened
60 - 64 HRc

To Be Use With:

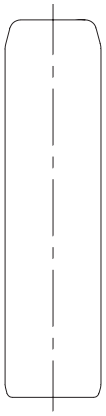

STRAIGHT GUIDE POSTS

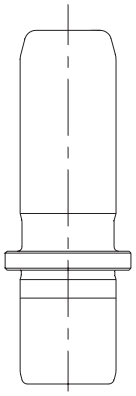

DEMOUNTABLE GUIDE POSTS

Examples

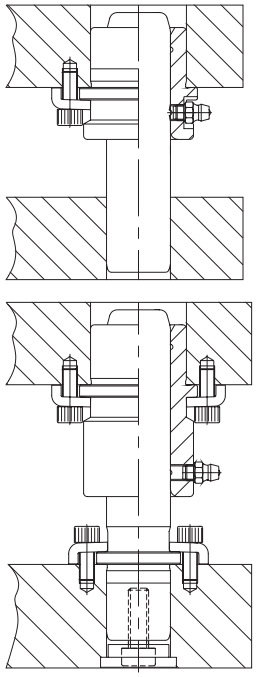

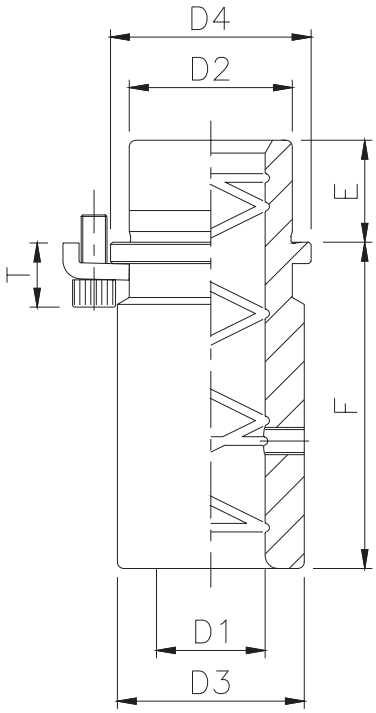

Clamp Arragements

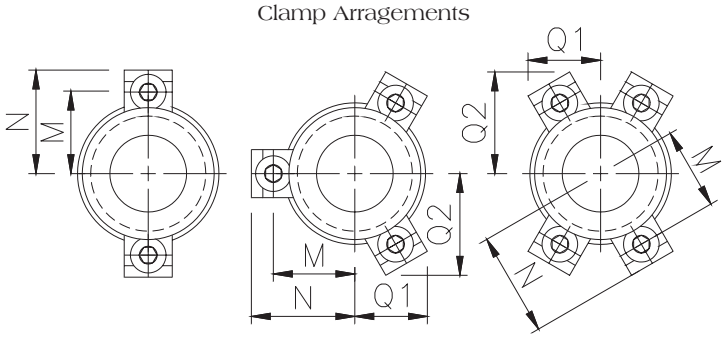

Component Parts Supplied

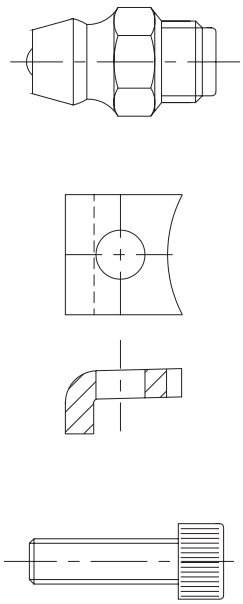

MDL Demountable Steel Bushings feature bearing quality alloy steel, case hardened. ID is precision ground and hone assuring interchangeability with Guide Posts.

Shoulder face and OD are ground in the same operation over an arbor to guarantee the concentricity and perpendicularity of the Bushing.

MDL Demountable Bronze Plated Bushings are manufactured using the same material and process as the steel bushings being electrolytic platted with Bronze before the honing operation.

The plating thickness is approximately 0,015 mm which assures the low coefficient of friction of the bronze with the rigidity of the steel.

MDL	Demountable Shoulder Bushings	STEEL B11.DDD.FFF BRONZE PLATED B21.DDD.FFF

D_1	20	25	32	40	50	63	80
F	SHORT SHOULDER BUSHINGS						
16	B11.020.016						
	B21.020.016						
20		B11.025.020	B11.032.020	B11.040.020	B11.050.020	B11.063.020	B11.080.020
		B21.025.020	B21.032.020	B21.040.020	B21.050.020	B21.063.020	B21.080.020
F	SHOULDER BUSHINGS						
32	B11.020.032						
	B21.020.032						
50		B11.025.050	B11.032.050	B11.040.050	B11.050.050	B11.063.050	B11.080.050
		B21.025.050	B21.032.050	B21.040.050	B21.050.050	B21.063.050	B21.080.050
F	LONG SHOULDER BUSHINGS						
75		B11.025.075	B11.032.075	B11.040.075	B11.050.075	B11.063.075	B11.080.075
		B21.025.075	B21.032.075	B21.040.075	B21.050.075	B21.063.075	B21.080.075
F	EXTRA LONG SHOULDER BUSHINGS						
100			B11.032.100	B11.040.100	B11.050.100	B11.063.100	B11.080.100
			B21.032.100	B21.040.100	B21.050.100	B21.063.100	B21.080.100
DIMENSIONAL DATA							
D_2	28	38	45	54	65	81	100
D_3	29	42	49	58	70	88	110
D_4	32,5	47,0	54,0	63,0	75,0	93,0	115,0
E	18	22	25	30	35	48	
M	19,5	27,5	31,0	37,0	43,0	52,0	63,0
N	26,3	35,7	39,1	48,0	53,9	62,8	73,7
Q_1	-	24,3	26,0	30,5	33,5	38,0	43,5
Q_2	-	34,1	37,1	44,9	50,1	57,9	67,5
T	11,3	15,1		18,1			
CLAMPS	B01.005.000	B01.006.000		B01.008.000			
SCREWS	A05.005.012 (M5 X 12)	A05.006.016 (M6 X 16)		A05.008.020 (M8 X 20)			
QTY.	2	3			4		

Low Profile Bushings

STEEL
B13.DDD.FFF

BRONZE PLATED
B23.DDD.FFF

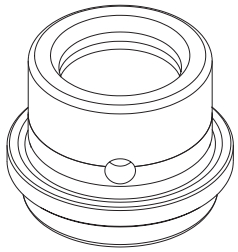

Case Hardened
60 - 64 HRc

To Be Use With:

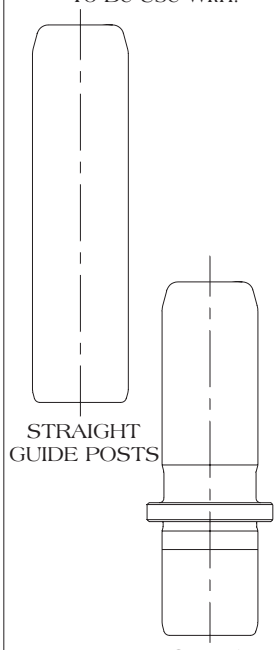

Examples

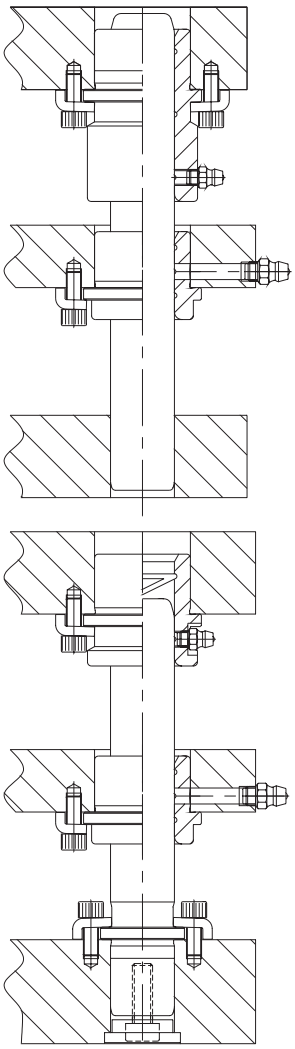

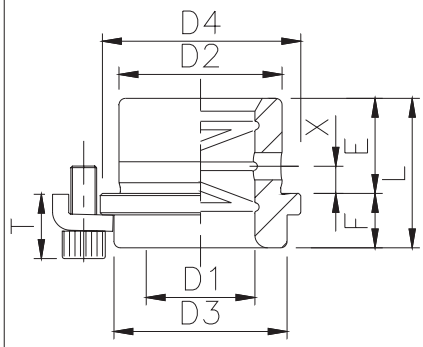

Component Parts Supplied

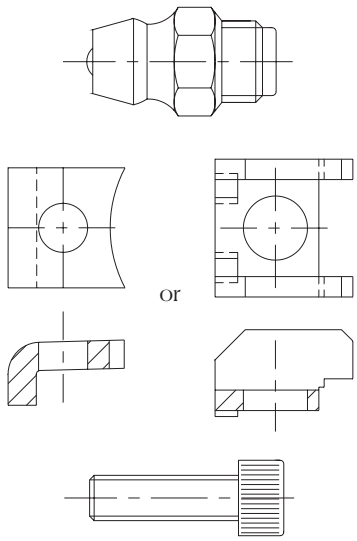

Clamp Arrangements

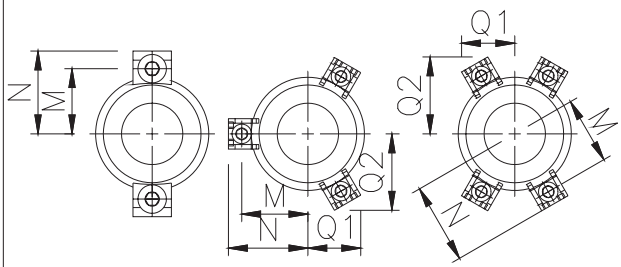

D_1	20	25	32	40	50	63	80
F	CATALOG NUMBER						
10	B13.020.010	B13.025.010	B13.032.010				
	B23.020.010	B23.025.010	B23.032.010				
14				B13.040.014	B13.050.014	B13.063.014	B13.080.014
				B23.040.014	B23.050.014	B23.063.014	B23.080.014
E	18	23	30	38	48	61	78
L	28	33	40	52	62	75	92
D_2		38	45	54	65	81	100
D_3	29	36	43	50	64	79	99
D_4	32,5	47,0	54,0	63,0	75,0	93,0	115,0
M	19,5	30,0	33,5	40,0	46,0	55,0	66,0
N	26,3	38,6	42,0	52,0	57,9	66,8	77,7
Q_1	-	25,2	27,0	33,7	36,7	41,2	46,7
Q_2	-	36,4	39,5	49,0	54,2	61,9	71,5
T	11,3	10,2		13,2			
X	6		10		20		32
CLAMPS	B01.005.000	B02.006.000		B02.008.000			
SCREWS	A05.005.012 (M5 X 12)	A05.006.012 (M6 X 12)		A05.008.016 (M8 X 16)			
QTY.	2	3			4		

Bore Sizes Recommendations

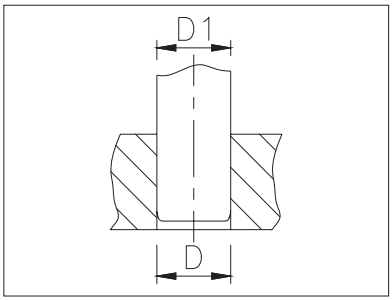

STRAIGHT GUIDE POSTS P10							
D_1	20	25	32	40	50	63	80
D	19,976 / 19,963	24,976 / 24,963	31,971 / 31,955	39,971 / 39,955	49,971 / 49,955	62,965 / 62,946	79,963 / 79,944

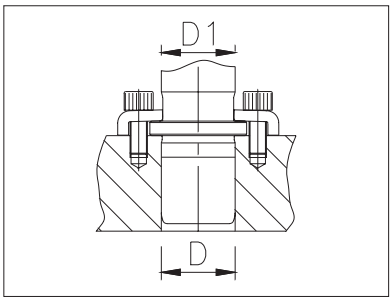

DEMOUNTABLE GUIDE POSTS LOCKED BY CLAMP P21							
D_1	20	25	32	40	50	63	80
D	19,976 / 19,963	24,976 / 24,963	31,971 / 31,955	39,971 / 39,955	49,971 / 49,955	62,965 / 62,946	79,963 / 79,944

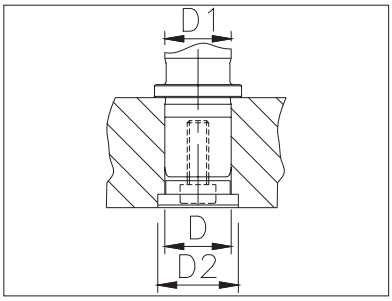

DEMOUNTABLE GUIDE POSTS LOCKED BY RETAINER PLUG P22							
D_1	20	25	32	40	50	63	80
D_2	26	33	41	51	64	77	94
D	19,976 / 19,963	24,976 / 24,963	31,971 / 31,955	39,971 / 39,955	49,971 / 49,955	62,965 / 62,946	79,963 / 79,944

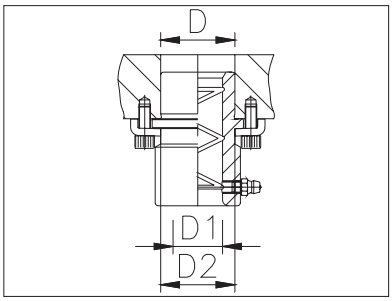

DEMOUNTABLE SHOULDER BUSHINGS B11 / B21							
D_1	20	25	32	40	50	63	80
D_2	28	38	45	54	65	81	100
D	28,000 / 28,013	38,000 / 38,016	45,000 / 45,016	54,000 / 54,019	65,000 / 65,019	81,000 / 81,022	100,000 / 100,022

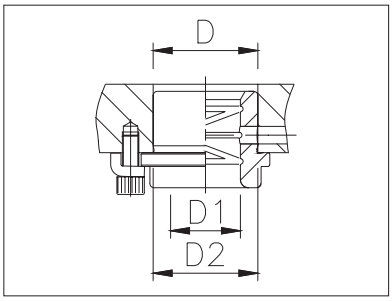

DEMOUNTABLE LOW PROFILE BUSHINGS B13 / B23							
D_1	20	25	32	40	50	63	80
D_2	28	38	45	54	65	81	100
D	28,000 / 28,013	38,000 / 38,016	45,000 / 45,016	54,000 / 54,019	65,000 / 65,019	81,000 / 81,022	100,000 / 100,022

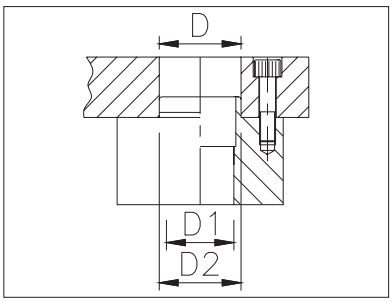

DEMOUNTABLE STEEL BOSSES X05 / X06 / X07 / X08					
D_1	32	40	50	63	80
D_2	54	65	81	100	118
D	54,000 / 54,019	65,000 / 65,019	81,000 / 81,022	100,000 / 100,022	118,000 / 118,022

CLAMPS

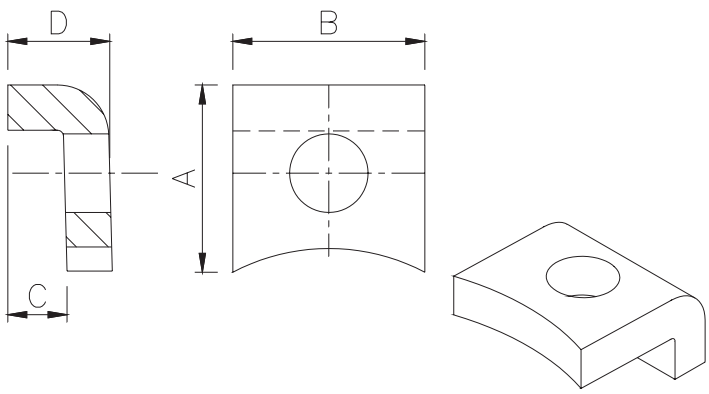

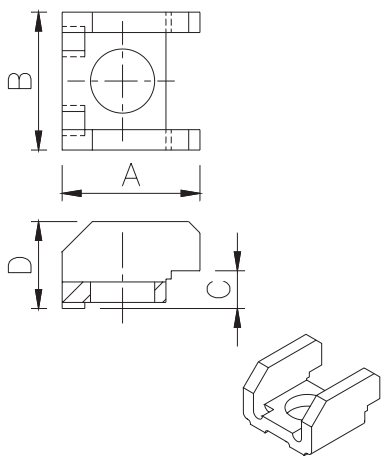

Cat. Nº	B01.005.000	B01.006.000	B01.008.000	B02.006.000	B02.008.000
A	12,3	15,5	19,8	18,3	24,6
B	12,7	15,9	15,9	14,5	18,8
C	3,2	4,9	4,9	5,0	5,0
D	5,6	8,7	9,5	10,0	13,0
SCREWS	A05.005.012 (M5 X 12)	A05.006.016 (M6 X 16)	A05.008.020 (M8 X 20)	A05.006.012 (M6 X 12)	A05.008.016 (M8 X 16)

LUBRICATION FITTING

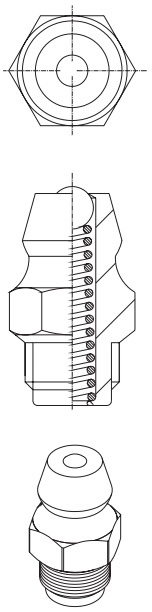

B05.006.001

RETAINER PLUGS

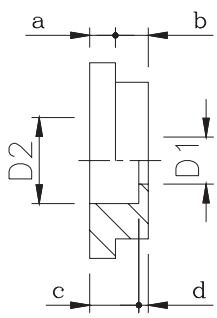

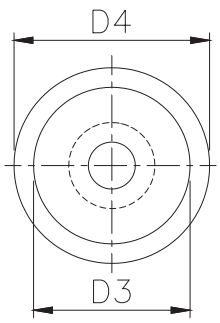

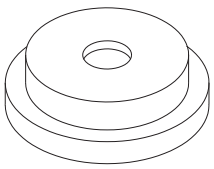

Post Dia.	20	25	32	40	50	63	80
Cat. Nº	P02.020.000	P02.025.000	P02.032.000	P02.040.000	P02.050.000	P02.063.000	P02.080.000
D_1	5,6	6,8	8,8	10,8	12,8	17,0	21,0
D_2	9,7	11,2	14,2	17,2	19,2	25,5	31,5
D_3	19	24	30	38	48	63	80
D_4	25	32	40	50	63	76	93
a	3,3	5,0					
b	4,2	4,0	7,0	10,0	13,0	19,0	25,0
c	5	6	8	10	12	16	20
d	2,5	3,0	4,0	5,0	6,0	8,0	10,0

Assembly Options for MDL Guiding Components

MDL

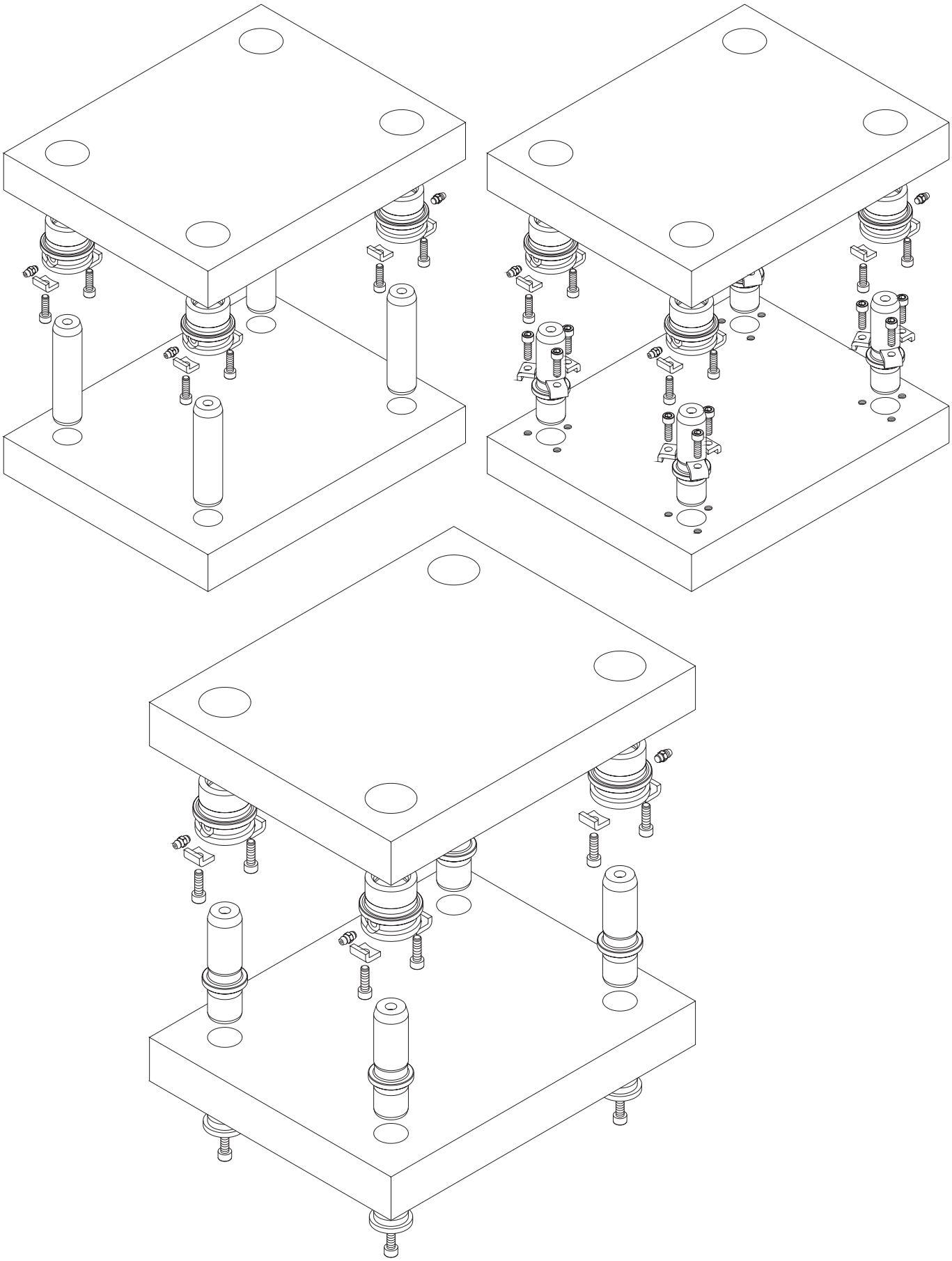

FEATURES OF MDL DEMOUNTABLE STEEL BOSSES

MDL Demountable Steel Bosses are manufactured with mild carbon steel to be use with Guide Posts and or Demountable Bushings.

They are available in two shapes (Round and Square) and different heights to meet the requirements of Special Die Sets.

The unique design of those Bosses allows them to be interchangeable and do not require the use of Dowel Pins for their assembly. Those bosses may be disassembly for tool grinding.

If required, those bosses could be welded to the Die Set after assembly.

The locating diameter on the Bosses for Guide Posts and Demountable Bushings is the same. This allows the two plates of the Die Set to be machined together in a single setup.

MDL Demountable Metric Steel Bosses can also be use with MDL Metric Ball Bearing Components shown on MDL Ball Bearing Components catalog. When using with Straight Sleeves or Demountable Ball Bearing Bushings, please contact your MDL representative.

ASSEMBLY OPTIONS

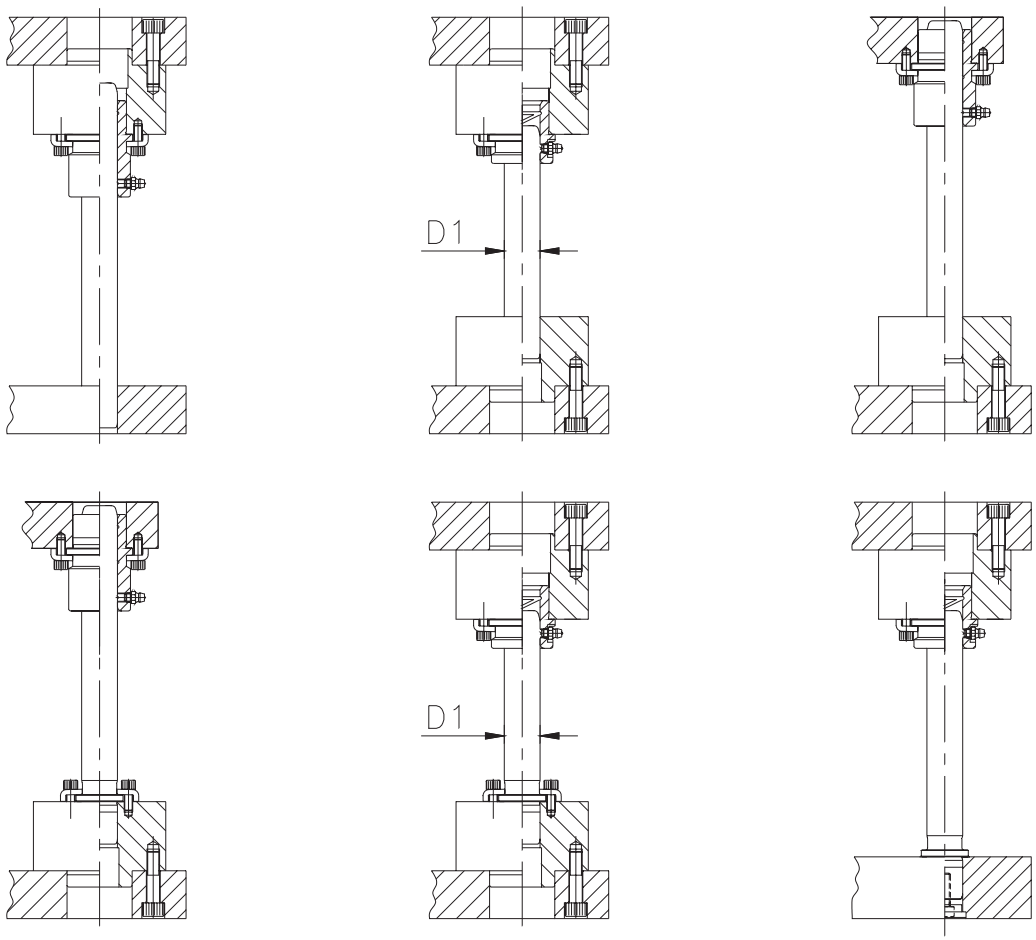

Assembly Options for MDL Steel Bosses

MDL

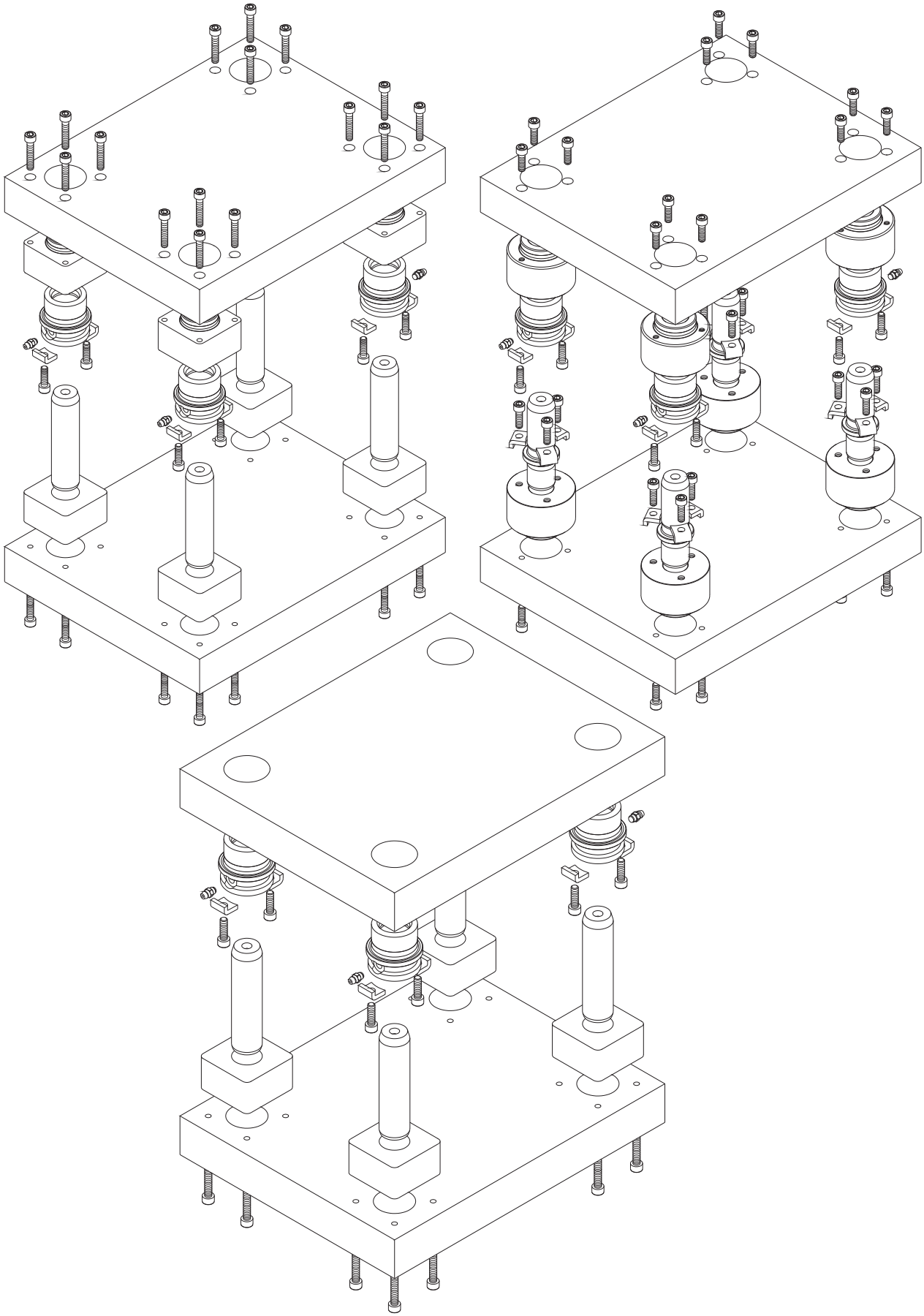

Demountable Round Steel Bosses

X05.DDD.FFF
X06.DDD.FFF

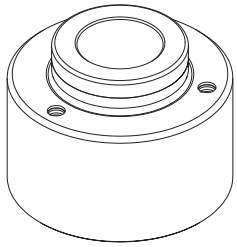

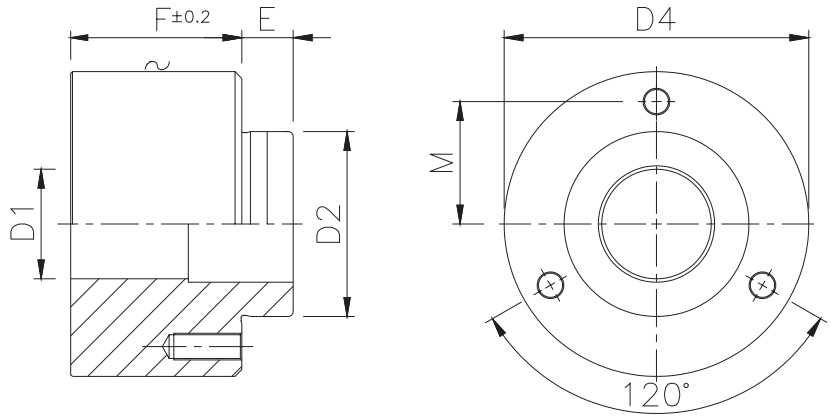

NB: Boss for Guide Post.

D_1	32	40	50	63	80
F	ROUND BOSSES FOR GUIDE POSTS				
40	X05.032.040				
50	X05.032.050				
63		X05.040.063			
80		X05.040.080	X05.050.080		
100			X05.050.100	X05.063.100	
125				X05.063.125	X05.080.125
F	ROUND BOSSES FOR BUSHINGS				
40	X06.032.040				
50	X06.032.050				
63		X06.040.063			
80		X06.040.080	X06.050.080		
100			X06.050.100	X06.063.100	
125				X06.063.125	X06.080.125
DIMENSIONAL DATA					
D_2	54	65	81	100	118
D_4	89	102	114	140	165
E	15				
M	35,75	41,75	48,75	60,00	70,75
THREAD	M6	M8			M10

Demountable Square Steel Bosses

X07.DDD.FFF
X08.DDD.FFF

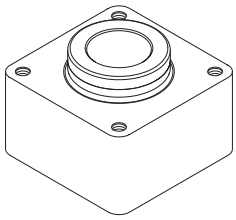

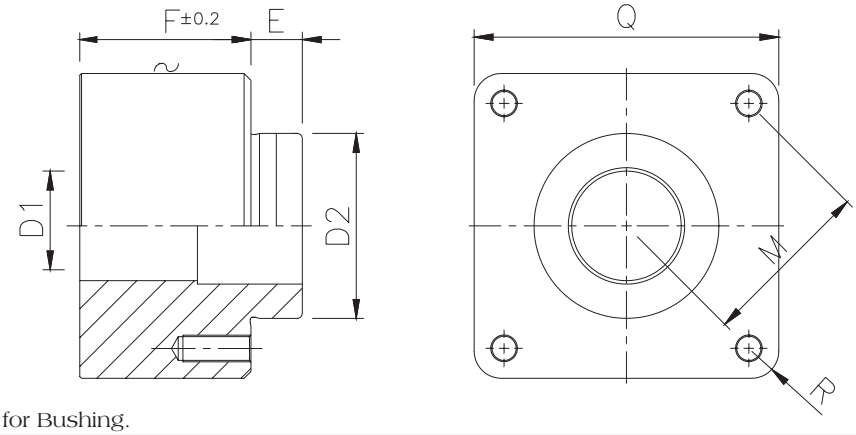

NB: Boss for Bushing.

D_1	32	40	50	63	80
F	SQUARE BOSSES FOR GUIDE POSTS				
40	X07.032.040				
50	X07.032.050				
63		X07.040.063			
80		X07.040.080	X07.050.080		
100			X07.050.100	X07.063.100	
125				X07.063.125	X07.080.125
F	SQUARE BOSSES FOR BUSHINGS				
40	X08.032.040				
50	X08.032.050				
63		X08.040.063			
80		X08.040.080	X08.050.080		
100			X08.050.100	X08.063.100	
125				X08.063.125	X08.080.125
DIMENSIONAL DATA					
D_2	54	65	81	100	118
Q	89	102	114	140	165
E	15				
M	48,79	55,15	59,40	77,78	88,39
THREAD	M6	M8			M10

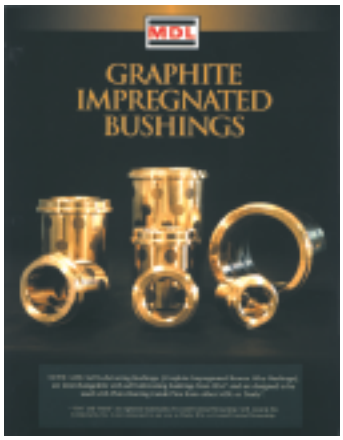

MDL - India Pvt. Ltd.
Tamil Nadu - India

MDL Rodis S.A.S.
Soultz - 68 - France

MDL - Brasil Ltda.
Mairinque - SP - Brazil

MDL of Mexico S.A. of C.V.
Queretaro - QRO - Mexico

Porter Besson S.A.S.
Serre les Sapins - 25 - France

MDL Mold & Die Components Inc.
Columbus - IN - US

MDL Mold & Die Components Inc.
4572 N. Long Road - Columbus, Indiana 47203
Phone: 1-800-574-0059 or 1-812-373-0021 Fax: 1-812-373-0042
www. mdlcomponents.com - sales1@mdlcomponents.com